版次 REV.	修訂 REVISIONS 記述 DESCRIPTION	日期 DATE
B2	修正散熱片之螺柱standoff位置	MAY-27-2016

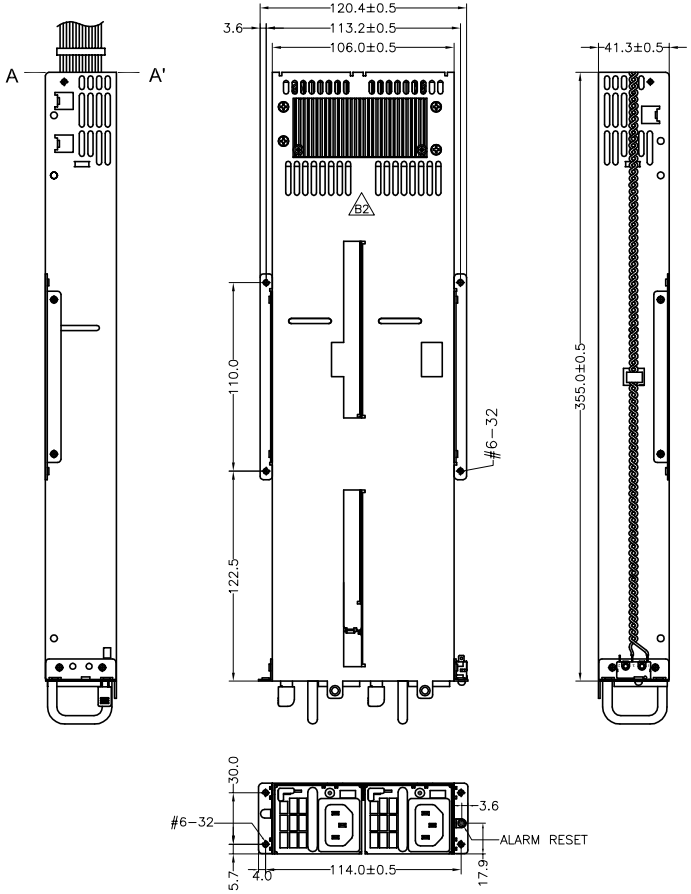

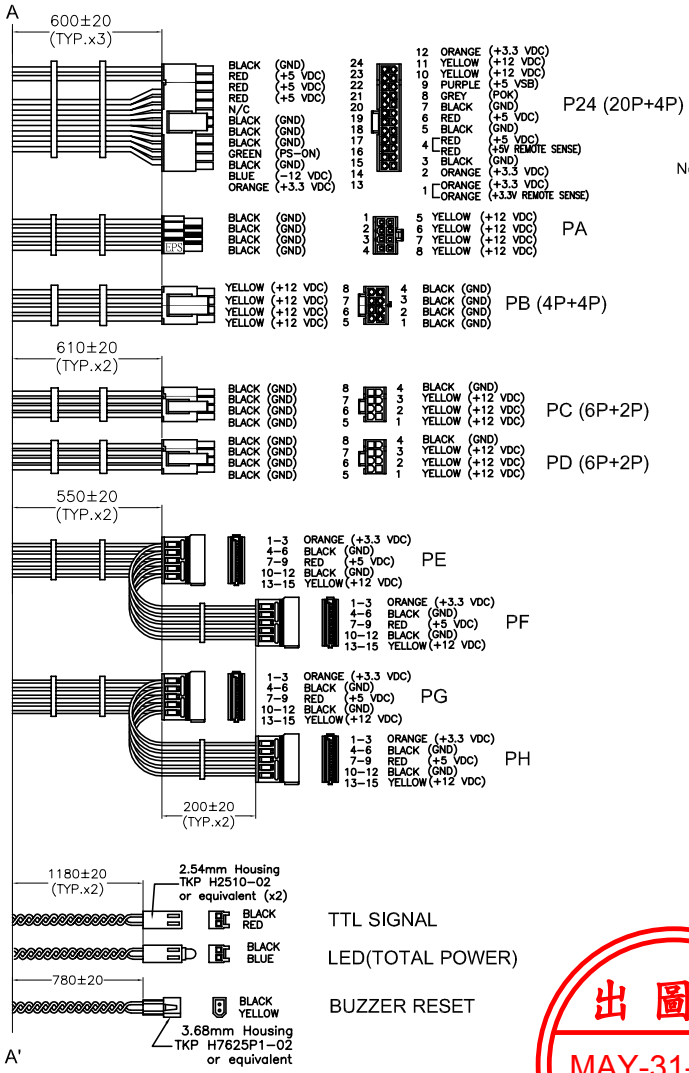

Notes:

(a) All the Length of Output Wires Exclude Housing.

(b) P24 Connector: DST CH4201-220M/2 + CH4201-204M/2 or EQUIV.
Terminal: MOLEX 39-00-0059/79 or EQUIV.

(c) PA Connector: MOLEX 39-01-2080 or EQUIV.
Terminal: MOLEX 39-00-0059 or EQUIV.

(d) PB Connector: WST P8-I42002K3 or EQUIV.
Terminal: MOLEX 39-00-0079/59 or EQUIV.

(e) PC,PD Connector: P6-I42002K13-FRE5 + P2-I42002K13A-FRE1 or EQUIV.
8P(6P+2P) PCI Express
Terminal: MOLEX 39-00-0059 or EQUIV.

(f) PE~PH Connector: MOLEX 675820000 or EQUIV.
Terminal: MOLEX 675810000 or EQUIV.

(g) PI~PM Connector: AMP 1-480424-0 or EQUIV.
Terminal: AMP 61117-4 or EQUIV.

(h) PN Connector: AMP 171822-4 or EQUIV.
Terminal: AMP 170262-1 or EQUIV.

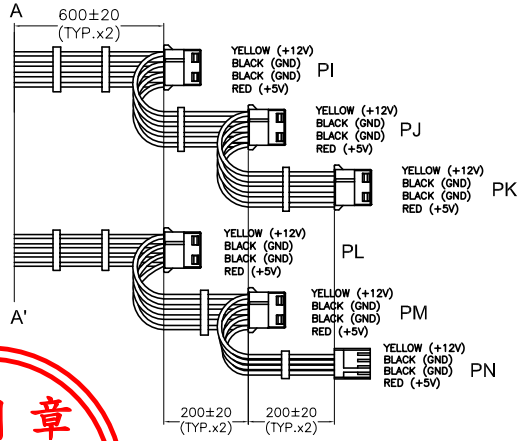

出圖章
MAY-31-2016
研發本部

容許公差: TOLERANCES: .XXX ±.025 .XX ±.100 .X ±.250	材料規格: MATERIAL:		品名: MODEL NO: M1U2-5751V4H
	核准者: APPROVE BY: 黃永欣	日期: DATE: MAY-27-2016	料號: PART NO: B00M1U275V039
投影法: PROJECTION: 第三角法	審核者: CHECK BY: 李宗翰	日期: DATE: MAY-27-2016	圖號: DRAW NO: B00M1U275V039 / 檔號: FILE NO: B00M1U275V039
	繪圖者: DRAW BY: 陳嬿屏	日期: DATE: MAY-27-2016	單位: UNITS: mm / 版次: REV. NO: B2 / 規格: SPEC.: A0 / 編號: SHEET: OF

新巨企業股份有限公司
ZIPPY TECHNOLOGY CORP.
POWER DIVISION