‘5VBD’ SERIES NEEDLE MANIFOLD

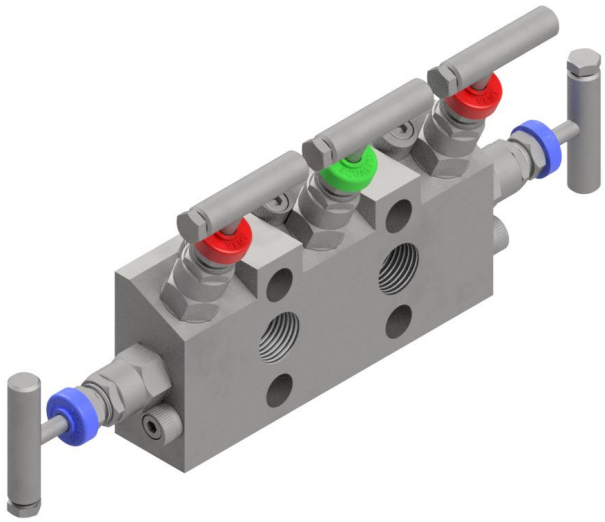

Direct Mounted 5 Valve Needle Manifold 6,000 PSI

Direct style block mounted 5 valve manifold, instrument mount to pipe connection. Offering two isolation valves, two vent valves and one equalising valve (see attached drawing). Used in differential pressure transmitters and static instrument applications. Standard 2 x 1/2" inlet x 2 x 1/2" outlet all on 54mm instrument centres with 2 x 1/4" vent port. Incorporating all the standard long service life features of the standard ‘N’ series needle valve, multi-ring piston style packing, back sealing facility. Mounting holes supplied as standard for wall or bracket mounting.

DESIGN FEATURES

• All valves have 2-piece non-rotating hardened (17-4PH) tips as standard.	• Temperature range -40°C to 230°C (427°C with GP option)
• Positive no slack stem action.	• Available in 316ss, Monel, Duplex, and other exotic materials.
• Bubble tight shut off.	• 54mm (2 1/8”) instrument centres.
• Supplied with bolt pack and PTFE seals as standard.	• Full material traceability.
• Metal to metal body bonnet seal for high pressure and high temperature use.	• Two valve configurations available (oil and gas).
• Unique bonnet locking cam.	• Repair / service kit available to extend field life further.
• Base mounting holes to allow fixing to enclosure or mounting boss.	• Materials of construction can be supplied to meet the requirements of NACE MR 0175.

IOM REFERENCE: 5VBD-5-NVM-6K-O

THIS DRAWING IS SUBJECT TO 'COPYRIGHT' IT CANNOT BE COPIED OR REPRODUCED WITHOUT THE WRITTEN AUTHORITY OF THE COMPANY

CONFIDENTIAL

DIMENSIONS SHOWN ARE IN METRIC MM

REVISIONS

REV No.	DATE	DETAILS OF CHANGE	REV BY
1	30/04/2015	ISSUED	~~

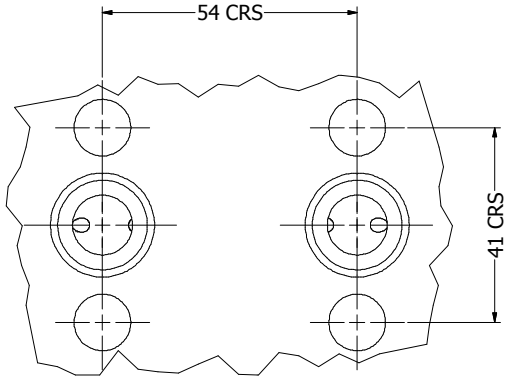

DIRECT MOUNT INSTRUMENT CONNECTION DETAIL **A-A**

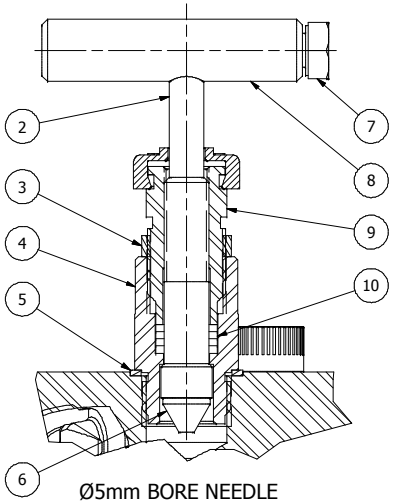

Ø5mm BORE NEEDLE VALVE DETAILS

FLOW DIAGRAM

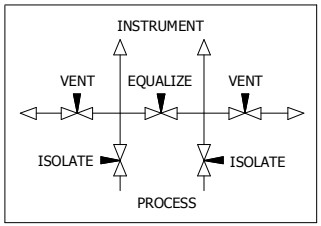

ITEM	DESCRIPTION	MATERIAL	QTY
1	VALVE BODY	A479 UNS S31600	1
2	NEEDLE STEM	A479 UNS S31600	5
3	GLAND LOCKNUT	UNS S31600	5
4	BONNET HOUSING	A479 UNS S31600	5
5	BONNET SEAL	UNS S31600	5
6	VALVE TIP	A564 UNS S17400	5
7	HANDLE BOLT	A4 ST/ST	5
8	"T" HANDLE	UNS S31600	5
9	GLAND ADJUSTER	UNS S31600	5
10	PACKING	RTFE	20
11	ISOLATE DUST CAP	PVC	2
12	VENT DUST CAP	PVC	2
13	EQUALISE DUST CAP	PVC	1
14	CAM SCREW	A4 ST/ST	5
15	LOCKING CAM	UNS S31600	5
16	BLANK PLUG	A479 UNS S31600	2

PART NO	CONNECTION SIZE	BORE	WEIGHT
5VBD4NS-TM-O	1/2" NPT	3	2.4 Kg

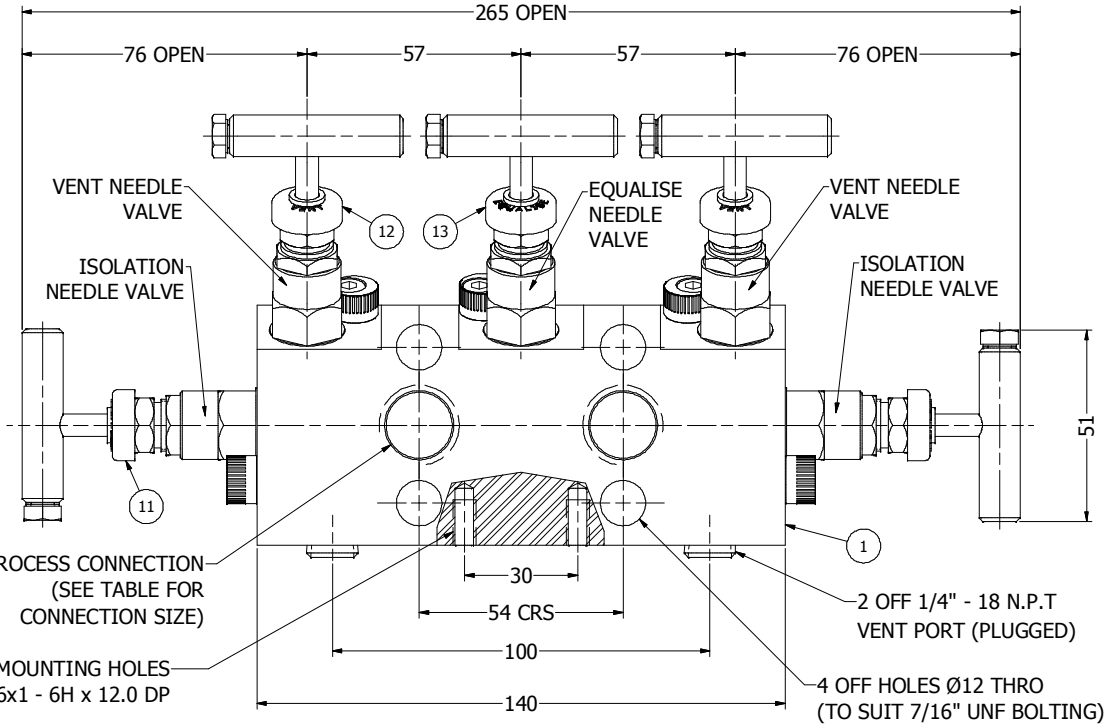

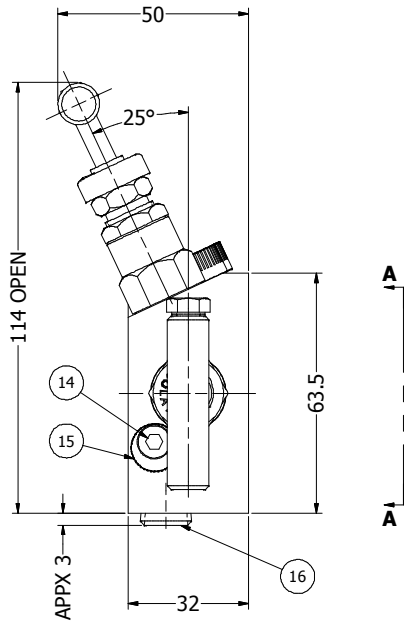

3rd Angle

'IMPORTANT' - THIS DOCUMENT MAY CONTAIN CONTROLLED INFORMATION AND COULD THEREFORE REQUIRE EXPORT PERMISSIONS FROM RELEVANT AUTHORITIES IN YOUR COUNTRY

PRESSURE RATINGS ARE COLD WORKING, NON-SHOCK AND SUBJECT TO TEMPERATURE LIMITATIONS, UNLESS OTHERWISE STATED. PLEASE SEE SPECIFIC PRODUCT DATA

DIMENSIONS AND DESIGNS ARE SUBJECT TO CHANGE WITHOUT PRIOR NOTICE

TYPICAL VALVE LAYOUT

Alco Valves ®
Industrial Valve Manufacturers
Mission Works, Birds Royd Lane, Brighouse
West Yorkshire, HD6 1LQ - UK
Tel: 01484 710511 Fax: 01484 713009 Intl: ++44 1484 710511
Website: www.alco-valves.com e-mail: uk@alco-valves.com

TITLE: 1/2" NPT FEMALE PROCESS x DIRECT MOUNT INSTRUMENT '5VBD' SERIES NEEDLE MANIFOLD IN 316 ST/ST MATERIAL OIL TYPE CONFIGURATION. 'T' BAR HANDLES. RATED 6,000psi.

SCALE: N.T.S.

DATE: 30/04/2015

DRAWING NUMBER	DRWN	C.L.	CHKD	I.M.	APRD	A.P.M
5VBD#NS-TM-O TABULATED	REVISION No.	1				

IOM REFERENCE: 5VBD-5-NVM-6K-G

THIS DRAWING IS SUBJECT TO 'COPYRIGHT' IT CANNOT BE COPIED OR REPRODUCED WITHOUT THE WRITTEN AUTHORITY OF THE COMPANY

CONFIDENTIAL

DIMENSIONS SHOWN ARE IN METRIC MM

REVISIONS

REV No.	DATE	DETAILS OF CHANGE	REV BY
1	29/06/2015	ISSUED	~~

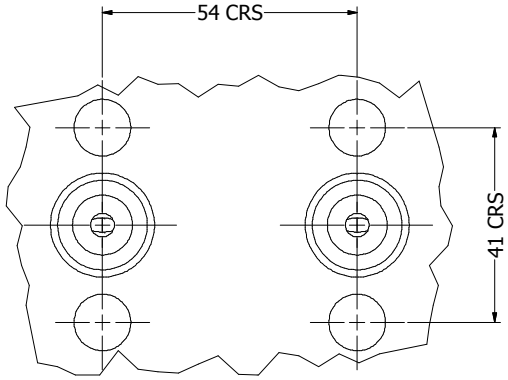

DIRECT MOUNT INSTRUMENT CONNECTION DETAIL **A-A**

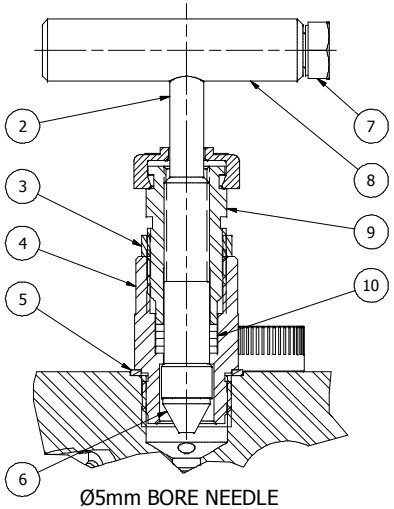

Ø5mm BORE NEEDLE VALVE DETAILS

FLOW DIAGRAM

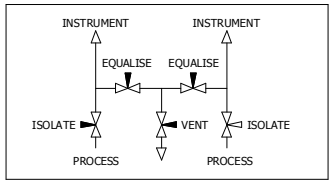

ITEM	DESCRIPTION	MATERIAL	QTY
1	NEEDLE MANIFOLD	A479 UNS S31600	1
2	NEEDLE STEM	A479 UNS S31600	5
3	GLAND LOCKNUT	UNS S31600	5
4	BONNET HOUSING	A479 UNS S31600	5
5	BONNET SEAL	UNS S31600	5
6	VALVE TIP	A564 UNS S17400	5
7	HANDLE BOLT	A4 ST/ST	5
8	"T" HANDLE	UNS S31600	5
9	GLAND ADJUSTER	UNS S31600	5
10	PACKING	RTFE	20
11	EQUALISE DUST CAP	PVC	2
12	ISOLATE DUST CAP	PVC	2
13	VENT DUST CAP	PVC	1
14	CAM SCREW	A4 ST/ST	5
15	LOCKING CAM	UNS S31600	5
16	BLANK PLUG	A479 UNS S31600	1

PART NO	CONNECTION SIZE	BORE	WEIGHT
5VBD4NS-TM-G	1/2" NPT	3	2.4 Kg

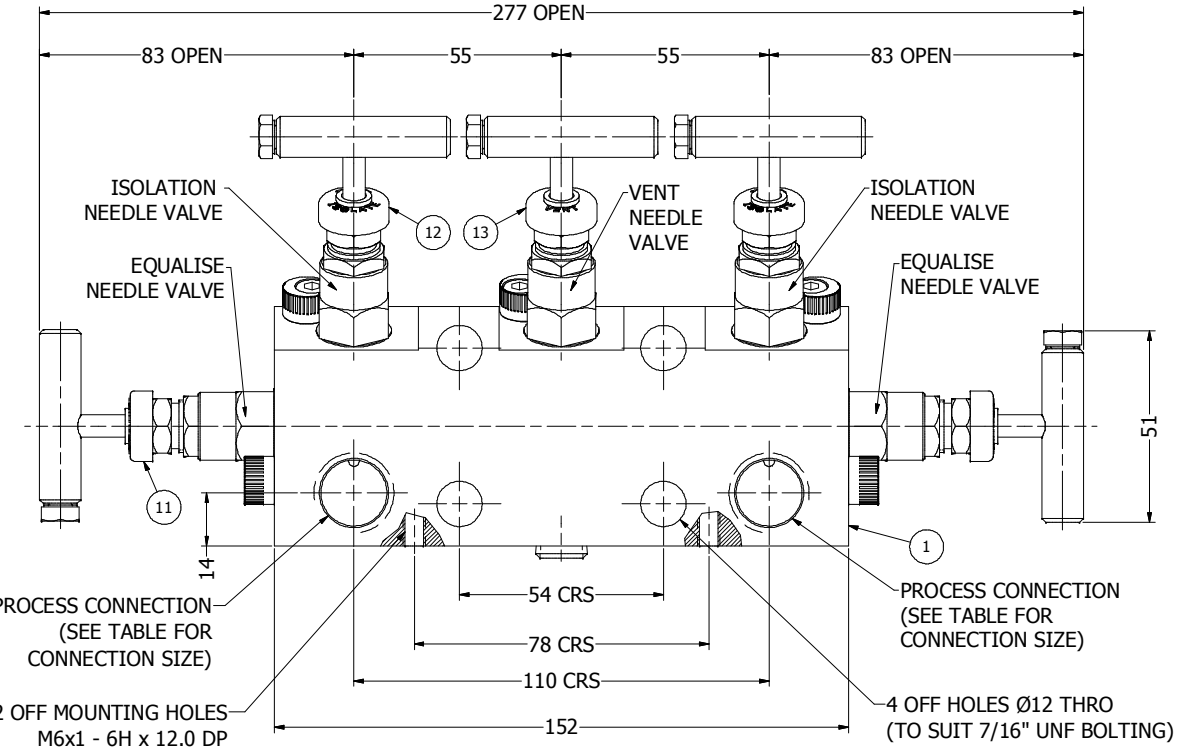

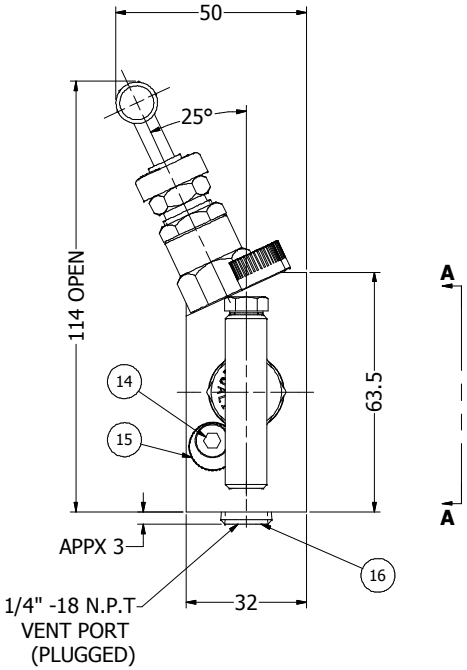

3rd Angle

'IMPORTANT' - THIS DOCUMENT MAY CONTAIN CONTROLLED INFORMATION AND COULD THEREFORE REQUIRE EXPORT PERMISSIONS FROM RELEVANT AUTHORITIES IN YOUR COUNTRY

PRESSURE RATINGS ARE COLD WORKING, NON-SHOCK AND SUBJECT TO TEMPERATURE LIMITATIONS, UNLESS OTHERWISE STATED. PLEASE SEE SPECIFIC PRODUCT DATA

DIMENSIONS AND DESIGNS ARE SUBJECT TO CHANGE WITHOUT PRIOR NOTICE

TYPICAL VALVE LAYOUT

Alco Valves ®
Industrial Valve Manufacturers
Mission Works, Birds Royd Lane, Brighouse
West Yorkshire, HD6 1LQ - UK
Tel: 01484 710511 Fax: 01484 713009 Intl: ++44 1484 710511
Website: www.alco-valves.com e-mail: uk@alco-valves.com

TITLE: 1/2" NPT FEMALE PROCESS x DIRECT MOUNT INSTRUMENT '5VBD' SERIES NEEDLE MANIFOLD IN 316 ST/ST MATERIAL GAS TYPE CONFIGURATION. 'T' BAR HANDLES. RATED 6,000psi.

SCALE: N.T.S.

DATE: 29/06/2015

DRAWING NUMBER	DRWN	C.L.	CHKD	J.D.	APRD	I.M.
5VBD#NS-TM-G TABULATED	REVISION No.	1				