TRANSMITTERS

HygroFlex3 series

The new HygroFlex3 series is the latest development in HVAC transmitters for relative humidity, temperature and dew point. Based on AirChip3000 technology, the transmitters offer high accuracy at a low cost.

The new generation boasts a unique calibration and adjustment process as well as many other unbeatable innovations. At the same time we have taken the sensor technology to a whole new level of performance and reliability:
The HygroFlex3 series offers you maximum reproducibility and a guaranteed system accuracy of ‹±2 %rh and ±0.3 K. The transmitters come in various versions and there are also thermostats/hygrostats available for the duct and wall versions. Many useful functions can be activated with the optional HW4 software.

Applications

HVAC applications in cost-sensitive applications, building management systems, museums, libraries, etc.

Highlights

- Unique calibration and adjustment process
- Highest reproducibility
- Guaranteed system accuracy of ‹2 %rh and 0.3 K
- Space, wall and duct mount versions
- Many useful functions can be accessed with optional HW4 software

AIR CHIP TECHNOLOGY

HF3x Space Mount

Applications

HVAC applications, cost-sensitive installations, building management systems, etc.

Highlights and common features

- Measures relative humidity, temperature and dew/frost point
- Range of application -40...60 °C; -10...60 °C with LCD, 0...100 %rh
- Automatic sensor test & drift compensation *
- Saves up to 2,000 measurement pairs*
- Use as simulator for system validation *
- UART service interface
- Integrated, extractable probe
- Adjustment profile «Standard», factory certificate
- Adjusted at 23 °C and 10, 35, 80 %rh
- Accuracy: ±2 %rh / ±0.3 K

Space version	**HF320-S series**	**HF320-R series**
Type	2- or 2 x 2-wire	
Signals	Signals freely scalable *	
Probe	Fixed	Extractable
Integrated LC display	Optional	

* Optional, requires HW4 software

Space version	**HF33x-S series**	**HF33x-R series**
Type	3/4-wire	
Signals	Signals freely selectable and scalable by user *	
Probe	Fixed	Extractable
Integrated display	Optional	

* Optional, requires HW4 software

Type R

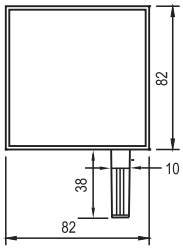

Type S

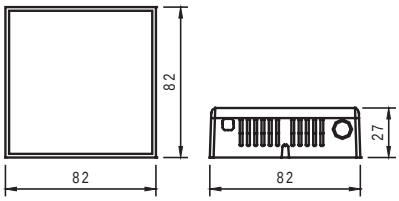

HF3 Wall & Duct Versions

Applications

HVAC applications, cost-sensitive installations, building management systems, etc.

Highlights and common features

- Measures relative humidity, temperature and dew/frost point
- Range of application -40...60 °C, 0...100 %rh
- Automatic sensor test & drift compensation *
- Saves up to 2,000 measurement pairs*
- Use as simulator for system validation *
- UART service interface
- Adjustment profile «Standard», factory certificate
- Adjusted at 23 °C and 10, 35, 80 %rh
- Accuracy: ±2 %rh / ±0.3 K

Duct version	HF320-D series	HF33x-D series
Type	2- or 2 x 2-wire	3/4-wire
Signals	Signals freely scalable*	Signals freely selectable and scalable*
Filter	Polyethylene filter	

Duct version	HF346-D
Type	Thermostat/Hygrostat with 2 single pole changeover relays
Switching range	Scalable*
Switching parameters	Temperature, humidity, dew point
Switch points	Potentiometer & LED for fine adjustment

* Optional, requires HW4 software

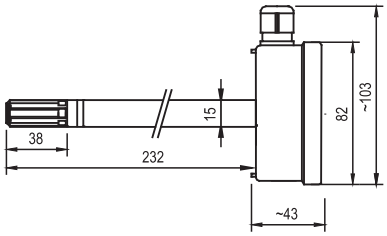

Wall version	HF320-W series	HF33x-W series
Type	2- or 2 x 2-wire	3/4-wire
Signals	Signals freely scalable*	Signals freely selectable and scalable*
Filter	Polyethylene filter	

Wall version	HF346-W
Type	Thermostat/Hygrostat with 2 single pole changeover relays
Switching range	Scalable*
Switching parameters	Temperature, humidity, dew point
Switch points	Potentiometer & LED for fine adjustment

* Optional, requires HW4 software

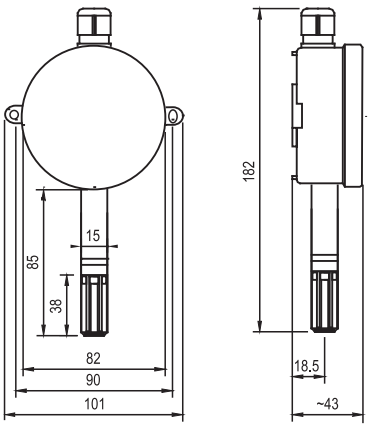

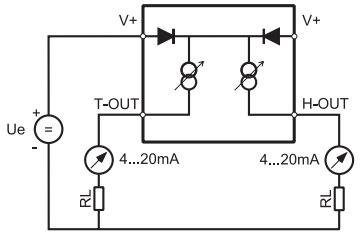

Schematic 2-wire types

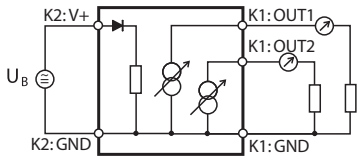

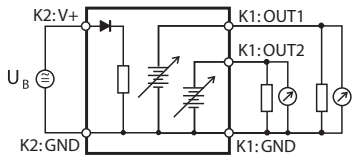

Schematic 3-wire types

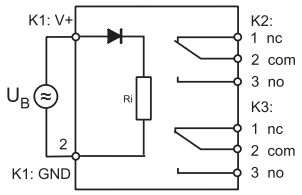

Schematic hygrostat/thermostat

Order information (for accessories see pages 99-102)									
HF3x transmitters with analog signals									
Power supply and output signal type									
HF320-									2- or 2 x 2-wire, ‹28 VDC, common supply V+, 4...20 mA
HF331-									3/4-wire (15...40 VDC / 12...28 VAC, 0...20 mA)
HF332-									3/4-wire (15...40 VDC / 12...28 VAC, 4...20 mA)
HF333-									3/4-wire (5...40 VDC / 5...28 VAC, 0...1 V)
HF334-									3/4-wire (10...40 VDC / 8...28 VAC, 0...5 V)
HF335-									3/4-wire (15...40 VDC / 12...28 VAC, 0...10 V)
Instrument type									
	D				X				Duct mount, Ø 15 x 235 mm (standard)
	S								Space mount
	R								Space mount with external sensor
									(Accuracy: ±1 %rh / 0.2 K)
	W				X				Wall mount, Ø 15 x 85 mm (standard)
Output parameters									
		B				X	X	X	Humidity (0...100 %rh) & temperature
		H				X	X	X	Only humidity (0...100 %rh)
		T				X	X	X	Only temperature
		A							Dew point & temperature
Standard scaling temperature *									
			1	**X**					Temperature (0...50 °C)
			6	**X**					Temperature (0...100 °F)
Optional display									
					D				Backlit display (only HF33x-S)
					X				Without display
Standard scaling dew point / frost point									
						X	**B**	**X**	-50...50
						X	**C**	**X**	-50...100

Order information (for accessories see pages 99-102)									
Hygrostat / Thermostat HF346									
Power supply									
HF346-									3/4-wire (18...40 VDC / 12...28 VAC)
Instrument type									
	D								Duct mount, Ø 15 x 235 mm (standard)
	W								Wall mount, Ø 15 x 85 mm (standard)
Output parameters relay									
		B			**X**	**X**			Humidity & temperature
		H	**X**	**X**	**X**	**X**			Only humidity
		T			**X**	**X**	**X**	**X**	Only temperature
		A					**X**	**X**	Temperature & dew point
Control range potentiometer temperature *									
			1	**X**					0...50 °C
			6	**X**					0...100 °F
Control range potentiometer dew point / frost point *									
					B	**X**			-50...50
Control range potentiometer humidity*									
							4	**X**	0...100 %rh
* Other scaling on request									

Detailed specifications			
Power supply / Connections	HF32	HF33	HF34
Supply voltage	10...28 VDC	15...40 VDC or	8...40 VDC
	V min = 10 V + (0.02 x load*)	12...28 VAC	12...28 VAC
Current consumption	Max. 2 x 20 mA	‹50 mA	44 mA
Electrical connections	Type D and W: screw terminals and M16 cable gland Type R & S: screw terminals		N/A
Humidity measurement	HF32	HF33	HF34
Sensor	ROTRONIC Hygromer® IN-1		
Measurement range	0...100 %rh		
Accuracy at 23 °C	±2.0 %rh (type D, S and W) / ±1.0 %rh (type R)		±2.0 %rh
Repeatability	0.3 %rh		
Long term stability	‹1 %rh/year		
Response time	Typically 10 s for 63% of a change 35 → 80 %rh (1 m/sec air flow at sensor)		
Temperature measurement	HF32	HF33	HF34
Sensor	Pt100 1/3 Class B		
Measurement range	-40...60 °C / -40...140 °F		
Accuracy at 23 °C	±0.3 K (type D, S and W) / ±0.2 K (type R)		
Repeatability	0.05 °C		
Long term stability	‹1 °C/year		
Response time	4 sec for 63 % of a change from 23 to 80 °C (1 m/sec air flow at sensor)		
Calculated parameters	HF32	HF33	HF34
Psychrometric calculations	Dew point or frost point		
Start-up time	Typically 3.4 s	Typically 1.9 s	
Signal type (freely definable by user)	4...20 mA	0...20 mA, 4...20 mA 0...1 V, 0...5 V, 0...10 V	No analog signals
Scale limits	-999.99 ... +9999.99 units		
*Minimum/Maximum load (in Ω)	0/500 Ω	0/500 Ω (current signal), min. 1000 Ω (voltage signal)	
Optional display (only types R and S)	LCD, 1 or 2 decimals, without backlight	LCD, 1 or 2 decimals, with backlight and trend indicator	N/A
Probe material	Polycarbonate, except for types R and S		Polycarbonate
Filter material	Polyethylene, except for types R and S		Polyethylene
Housing material / Protection	ABS / IP 65, except for types R and S: IP 20		
Weight	90 g		105 g
CE/EMC compatibility	EN 61000-6-1: 2001, EN 61000-6-2: 2005 EN 61000-6-3: 2005, EN 61000-6-4: 2001 + A11		
Solder	Lead-free (RoHS-compliant)		
Fire resistance	Conforms to UL94-HB		
FDA/GAMP compatibility	Conforms to FDA21 CFR Part 11 and GAMP4		
Electronics operating range	-40...60 °C / -10...60 °C (models with display) 0...100 %rh, non-condensing		
Temperature limits at probe	-40...60 °C		
Maximum wind velocity at probe	20 m/s (7,870 ft /min), except for types R and S		
Configurable relay outputs	HF34		
Switch point adjustment	Potentiometer with scale (2 one-pole change-over relays)		
Switch point limits	-999.99...+9999.99 units (potentiometer minimum and maximum)		
Relay status indicator	LED (in housing)		
Breaking capacity	250 VAC / 6 A at ohmic load		
Service interface	UART IO D78F0114H (universal asynchronous receiver transmitter)		

TRANSMITTERS

HygroFlex4 Series

The new HygroFlex4 series is the latest development in HVAC transmitters for relative humidity, temperature and dew point. Based on AirChip3000 technology, these precision instruments achieve a new level of accuracy in this category of product, and are more precise than the HF3 series.

The new generation boasts a unique calibration and adjustment process as well as many other unbeatable innovations. At the same time we have taken the sensor technology to a whole new level of performance and reliability:
The HygroFlex4 series offers maximum reproducibility and a system accuracy of ‹±1 %rh and ±0.2 K. The transmitters are available in wall and duct mount versions. Many useful functions can be activated with the optional HW4 software.

Applications

High performance HVAC applications, building management systems, museums, libraries, etc.

Highlights

- Unique calibration and adjustment process
- Highest reproducibility
- System accuracy of ‹ ±1 %rh and ±0.2 K
- Wall and duct versions
- Many useful functions can be activated with the optional HW4 software

AIR CHIP TECHNOLOGY

HF4 Wall & Duct Versions

Applications

HVAC applications, building management systems, museums, libraries, etc.

Highlights and common features

- Measures relative humidity, temperature and dew/frost point
- Range of application -40...60 °C; -10...60 °C with LCD, 0...100 %rh
- Automatic sensor test & drift compensation *
- Records up to 2,000 measurement pairs *
- Use as a simulator for system validation *
- UART service interface
- Integrated probe
- Adjustment profile «Standard», factory certificate
- Adjusted at 23 °C and 10, 35, 80 %rh
- Accuracy: ±1 %rh / ±0.2 K
- Can be mounted on a DIN rail (see accessories, page 102)

Wall version	HF420-W series	HF43x-W series
Type	2- or 2 x 2-wire	3/4-wire
Signals	Signals freely scalable*	Signals freely selectable and scalable*
Features	Alarm indicators, display and keypad (optional)	
Filter	Polyethylene filter	

Duct version	HF420-D series	HF43x-D series
Type	2- or 2 x 2-wire	3/4-wire
Signals	Signals freely scalable*	Signals freely selectable and scalable*
Features	Horizontal version with display/keypad (optional)	
Filter	Polyethylene filter	

* Requires HW4 software

For networkable transmitters see pages 76-81

Vertical mounting

Horizontal mounting

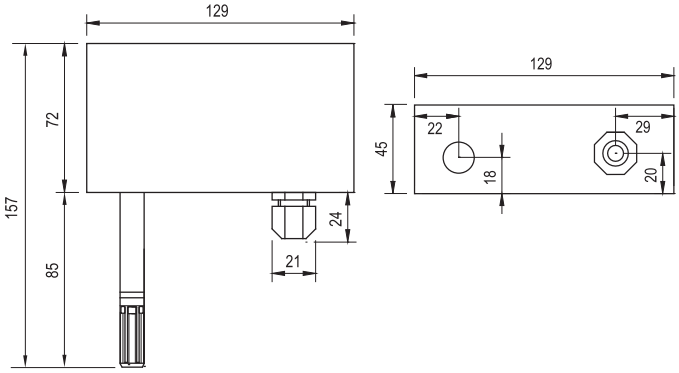

HF4X wall version

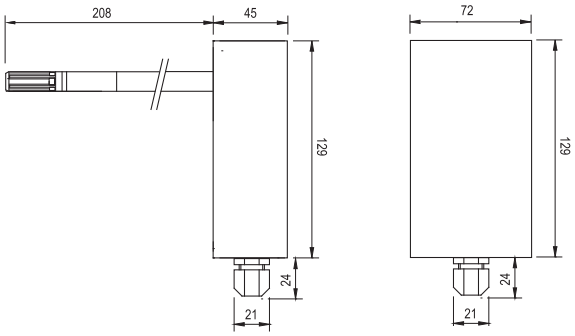

HF4X duct version (vertical mounting)

Order information (for accessories see pages 99-102)									
Transmitters with analog output signals									
Power supply and output signal type									
HF420-									2- or 2 x 2-wire, ‹10...28 VDC, common V+, 4...20 mA (Only display without backlight possible)
HF431-									3/4-wire, 15...40 VDC / 12...28 VAC, 0...20 mA
HF432-									3/4-wire, 15...40 VDC / 12...28 VAC, 4...20 mA
HF433-									3/4-wire, 5...40 VDC / 5...28 VAC, 0...1 V
HF434-									3/4-wire, 10...40 VDC / 8...28 VAC, 0...5 V
HF435-									3/4-wire, 15...40 VDC / 12...28 VAC, 0...10 V
Instrument type									
	D				X				Duct probe vertical, Ø 15 x 208 mm (standard, without display)
	W								Wall probe, Ø 15 x 85 mm (standard)
Output parameters									
		B					X	X	Humidity & temperature
		H	X	X			X	X	Only humidity
		T					X	X	Only temperature
		A							Temperature & dew point
Scaling of the output signals * (humidity: always 0...100 %rh)									
			X	X					No temperature output signal
			1	X					0...50 °C
			2	X					10...40 °C
			3	X					-40...60 °C
			4	X					-30...70 °C
			5	X					-40...85 °C
			6	X					0...100 °F
			7	X					0...200 °F
			9	X					-50...200 °F
Optional display									
					D				Display with backlight (only for horizontal mounting)
					X				No display
Electrical connections (analogue signals to terminals)									
						1			M16 x 1.5 cable gland (horizontal, type D with display and type W)
						2			M16 x 1.5 cable gland (vertical, type D without display)
						3			½" conduit adapter (horizontal, type D with display and type W)
						4			½" conduit adapter (vertical, type D without display)
Standard scaling dew point / frost point									
							X	X	No calculation
							B	X	-50...50 °C
							C	X	-50...100 °C
							D	X	-50...200 °F

* Others on request

Off-the-shelf types:		
Duct version:	**HF420-DB1XX2XX**	2-wire, → 4...20 mA = 0...100 %rh / 0...50 °C
	HF432-DB1XX2XX	3/4-wire, → 4...20 mA = 0...100 %rh / 0...50 °C
Wall version:	**HF420-WB1XX1XX**	2-wire, → 4...20 mA = 0...100 %rh / 0...50 °C
	HF432-WB1XX1XX	3/4-wire, → 4...20 mA = 0...100 %rh / 0...50 °C

Detailed specifications		
Power supply / Connections	HF42	HF43
Supply voltage	10...28 VDC V min = 10 V + (0.02 x load*)	15...40 VDC / 12...28 VAC
Current consumption	2 x 20 mA	‹50 mA
Electrical connections	Screw terminals and M16 cable gland or ½" conduit adapter	
Humidity measurement	HF42	HF43
Sensor	ROTRONIC Hygromer® IN-1	
Measurement range	0...100 %rh	
Accuracy at 23 °C	±1.0 %rh	
Repeatability	0.3 %rh	
Long term stability	‹1 %rh/year	
Response time	Typically 10 s for 63% of a change from 35 → 80 %rh (1 m/sec air flow at sensor)	
Temperature measurement	HF42	HF43
Sensor	Pt100 1/3 Class B	
Measurement range	-50...100 °C / -58...212 °F	
Accuracy at 23 °C	±0.2 K	
Repeatability	0.05 °C	
Long term stability	‹1 °C/year	
Response time	Typically 4 s for 63 % of a change from 23 to 80 °C (1 m/sec air flow at sensor)	
Calculated parameters	HF42	HF43
Psychrometric calculations	Dew point or frost point	
Start-up time	Typically 3.4 s	Typically 1.9 s
Signal type	4...20 mA	0...20 mA, 4...20 mA, 0...1 V, 0...5 V, 0...10 V Definable by user
*Minimum/Maximum load (in Ω)	0/500 Ω	0/500 Ω (current signal), min. 1000 Ω (voltage signal)
Service interface	UART IO D78F0114H (universal asynchronous receiver transmitter)	
Service cable maximum length	5 m (16.4 ft)	
General specifications	HF42	HF43
Optional display	LCD, 1 or 2 decimals, without backlight	LCD, 1 or 2 decimals, with backlight and trend indicators
Probe material	Polycarbonate	
Filter material	Polyethylene	
Housing material / Protection	ABS / IP 65 (except with USB or Ethernet interface)	
Weight	250 g	
CE/EMC compatibility	EMC Directive 2004/108/EC:	EN 61000-6-1: 2001, EN 61000-6-2: 2005 EN 61000-6-3: 2005, EN 61000-6-4: 2001 + A11
Solder	Lead-free (RoHS-compliant)	
Fire resistance	Conforms to UL94-HB	
FDA/GAMP compatibility	Conforms to 21 CFR Part 11 and GAMP4	
Electronics operating range	-40...60 °C / (models with display: -10...60 °C) 0...100 %rh, non-condensing)	
Temperature limits at probe	-50...100 °C	
Maximum air velocity at probe	20 m/s (7,870 ft /min)	

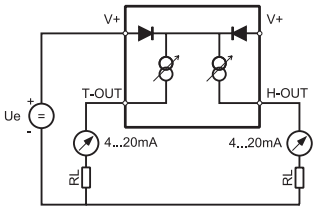

Schematic 2-wire types

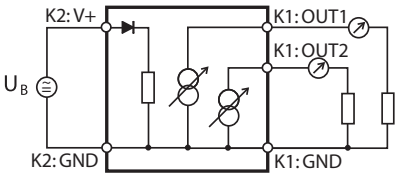

Schematic 3-wire current signal

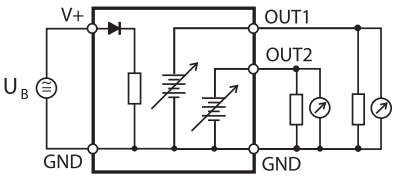

Schematic 3-wire voltage signal

TRANSMITTERS

HygroFlex5 series

The HygroFlex5 series offers you ultimate performance and flexibility thanks to its interchangeable HygroClip2 probes. The transmitters come in wall and duct mount versions. Many useful functions can be accessed with optional HW4 software.

HF5-Series is available with analog and digital outputs, so compatibilty with almost any monitoring or control system is assured. Digital versions may be networked togther to form a dedicated environmental monitoring system using HW4 software.

The new generation device not only has a unique calibration and adjustment process, but also allows probes to be interchanged in just a few seconds. This easy interchangeability during operation reduces down-time and service costs to a huge extent. The possibility of using every probe as a simulator with fixed output values is a big advantage for system validation. In the case of networked devices this can even be carried out online from a remote PC workstation.

Applications

High specification HVAC applications, building management systems, museums, libraries, environmental monitoring systems.

Highlights

- Unique calibration and adjustment process
- Highest reproducibility
- Wall and duct versions; the wall version also serves for the connection of cable based probes
- Many useful functions can be activated with the optional HW4 software

HF5 WALL & DUCT VERSIONS

Applications

HVAC applications, building management systems, museums, libraries, etc.

Highlights and common features

- Probe interchangeable in just a few seconds
- Measures relative humidity, temperature and dew/frost point
- Calculates all psychrometric values
- Range of application -40...60 °C; -10...60 °C with LCD, 0...100 %rh
- Automatic sensor test & drift compensation *
- Use as a simulator for system validation *
- UART service interface
- Precision: dependent on the probe and adjustment profile used
- Can be mounted on a DIN rail (see accessories, page 102)
- Suitable probes: all HygroClip2 (HC2x) probes
- Includes flange for duct mounting

Wall version	HF52-W series	HF53-W series
Type	2- or 2 x 2-wire	3/4-wire
Signals	Signals freely scalable*	Signals freely selectable and scalable*
Features	Alarm indicators, display and keypad (optional) Optional USB & RS485 interface	

Duct version	HF520-D series	HF53x-D series
Type	2- or 2 x 2-wire	3/4-wire
Signals	Signals freely scalable*	Signals freely selectable and scalable*
Features	Alarm indicators, display and keypad (optional)	

* Optional, requires HW4 software

Note: Version without display for vertical mounting

Horizontal mounting

Vertical mounting

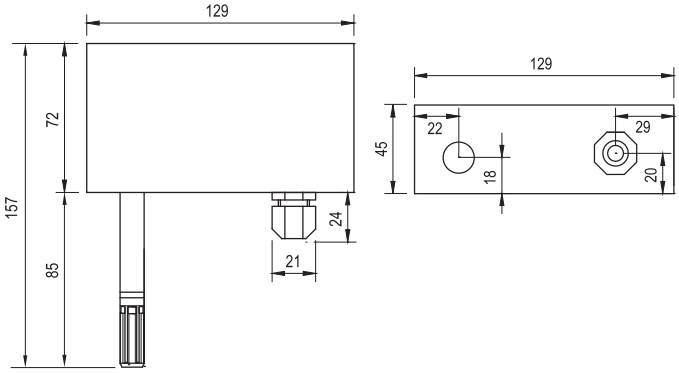

HF5x wall version

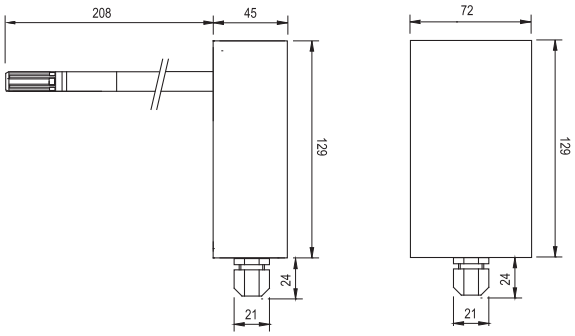

HF5x duct version (vertical mounting)

Order information (for accessories see pages 99-102)									
HF5 transmitters with analog signals									
Power supply and output signal type									
HF520-									2- or 2 x 2-wire, <10...28 VDC common supply V+, 4...20 mA
									Only display without backlight possible
HF531-									3/4-wire (15...40 VDC / 12...28 VAC, 0...20 mA)
HF532-									3/4-wire (15...40 VDC / 12...28 VAC, 4...20 mA)
HF533-									3/4-wire (5...40 VDC / 5...28 VAC, 0...1 V)
HF534-									3/4-wire (10...40 VDC / 8...28 VAC, 0...5 V)
HF535-									3/4-wire (15...40 VDC / 12...28 VAC, 0...10 V)
Instrument type									
	D				X				Duct mount vertical, Ø 15 x 208 mm (standard, without display)
	W								Wall mount, Ø 15 x 85 mm (standard)
Output parameters *									
		B					X	X	Humidity & temperature
		H	X	X			X	X	Only humidity
		T					X	X	Only temperature
		1	X	X					Humidity & dew point
		A							Temperature & dew point
		C							Temperature & wet bulb temperature (Tw) in °C
		D							Temperature & enthalpy (H) in kJ/kg
		E							Temperature & specific humidity (Q) in g/kg
		F							Temperature & absolute humidity (Dv) in g/m3
		G							Temperature & mixing ratio (R) in g/kg
Further calculations are possible. Please consult our price list in this regard.									
Scaling of the output signals * (humidity: always 0...100 %rh)									
			X	X					No temperature output signal
			1	X					0...50 °C
			2	X					10...40 °C
			3	X					-40...60 °C
			4	X					-30...70 °C
			5	X					-40...85 °C
			6	X					0...100 °F
			7	X					0...200 °F
			8	X					0...300 °F
			9	X					-50...200 °F
Optional display									
					D				Display with backlight (only for horizontal mounting)
					X				No display
Electrical connections (analogue signals to terminals) & interfaces									
						1			M16 x 1.5 cable gland, only analogue signals, horizontal mounting
						2			M16 x 1.5 cable gland, vertical mounting without display, only analogue signals
						7			M16 x 1.5 & USB & RS485, communication interface, horizontal mounting
Scaling of the calculated output parameters *									
							X	X	No calculation
							B	X	-50...50
							C	X	-50...100
							D	X	-50...200

* Others on request

Detailed specifications		
Power supply / Connections	HF52	HF53
Supply voltage	10...28 VDC, 4...20 mA current loop V min = 10 V + (0.02 x load*)	15...40 VDC /12...28 VAC at 500 Ω
Current consumption	2 x 20 mA	‹50 mA
Electrical connections	Screw terminals and M16 cable gland or ½" conduit adapter	
Humidity measurement	HF52	HF53
Sensor	ROTRONIC Hygromer® IN-1 (depending on the HygroClip2 used)	
Measurement range	0...100 %rh	
Accuracy at 23 °C	± 0.8 %rh (probe dependent)	
Repeatability	0.3 %rh	
Long term stability	‹1 %rh/year	
Response time	Typically 10 s for 63 % of a jump 35 → 80 %rh (1 m/sec air flow at sensor)	
Temperature measurement	HF52	HF53
Sensor	Pt100 1/3 Class B (in all HygroClip2 probes)	
Measurement range	-100...200 °C / -148...392 °F	
Accuracy at 23 °C	±0.1 K (probe dependent)	
Repeatability	0.05 °C	
Long term stability	‹1 °C/year	
Response time	Typically 4 s for 63 % of a change from 23 to 80 °C (1 m/sec air flow at sensor)	
Calculated parameters	HF52	HF53
Psychrometric calculations	All types available	
Start-up time	Typically 3.4 s	Typically 1.9 s
Signal type (selectable by jumper)	4...20 mA	0...20 mA, 4...20 mA , 0...1 V, 0... 5 V, 0...10 V
Scale limits	-999.99...+9999.99 units, user scaleable	
* Maximum load (in Ω)	0/500 Ω	0/500 Ω (current signal), min. 1000 Ω (voltage signal)
Type of interface	USB or Ethernet TCP/IP (cable connection or wireless) & RS485	
Service interface	UART (universal asynchronous receiver transmitter) on mini USB connector	
Service cable maximum length	5 m (16.4 ft)	
Optional display	LCD, 1 or 2 decimals, without backlight	LCD, 1 or 2 decimals, with backlight and trend indicator
Probe material	Polycarbonate	
Filter material	Polyethylene	
Housing material / Protection	ABS / IP 65 (except for models with USB interface)	
Weight	Approx. 250 g	
CE/EMC compatibility	EMC Directive 2004/108/EC	EN 61000-6-1: 2001, EN 61000-6-2: 2005 EN 61000-6-3: 2005, EN 61000-6-4: 2001 + A11
Solder	Lead free (RoHS-compliant)	
Fire resistance	Conforms to UL94-HB	
FDA/GAMP compatibility	Conforms to FDA 21CFR Part 11 and GAMP4	
Electronics operating range	-40...60 °C / (models with display: -10...60 °C) 0...100 %rh, non-condensing	
Maximum wind velocity at probe	40 m/s (7,870 ft/min)	

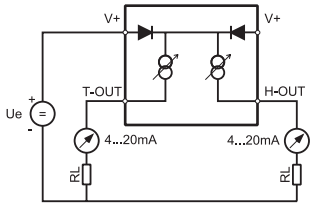

Schematic 2-wire types

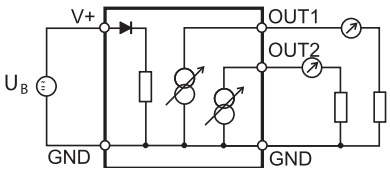

Schematic 3-wire current signal

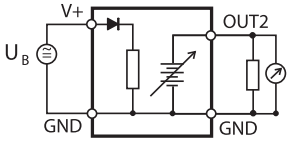

Schematic 3-wire voltage signal

TRANSMITTERS

HygroFlex6 series

HygroFlex6 series provides the highest specification and widest range of configurations for industrial applications. The transmitters come in wall, cable and duct versions. Many useful functions can be activated with the optional HW4 software. The measuring circuits of the HF6x series are galvanically isolated.

This new instrument generation not only boasts a unique calibration and adjustment process, but also allows every transmitter to be used as a simulator with fixed values. This is a big advantage for system validation. In the case of networked transmitters this can even be done online from a PC running ROTRONIC HW4 software.

Applications

HVAC applications, building management systems, museums, libraries, etc.

Highlights

- Unique calibration and adjustment process
- Highest reproducibility
- Wall, duct and cable versions
- Many useful functions can be activated with the optional HW4 software

HF6 WALL/CABLE MOUNT

Applications

HVAC applications, building management systems, museums, libraries, etc.

Highlights and common features

- Measures relative humidity, temperature and dew/frost point
- Electronics operating range -40...60 °C; -10...60 °C with LCD, 0...100 %rh
- Automatic sensor test & drift compensation *
- Saves up to 2,000 measurement pairs *
- Use as a simulator for system validation *
- UART service interface
- Integrated probe
- Adjustment profile «Standard», factory certificate
- Adjusted at 23 °C and 10, 35, 80 %rh
- Accuracy: ±1 %rh / ±0.2 K
- Mains or low voltage power supply

Wall mount	HF624-W series	HF63x-W series
Type	2- or 2 x 2-wire, galvanically isolated	3/4-wire
Signals	Signals freely scalable*	Signals freely selectable and scalable*
Features	Alarm indicators, display and keypad (optional)	
Filter	Polyethylene filter	

Cable mount	HF624-C series	HF63x-C series
Type	2- or 2 x 2-wire, galvanically isolated	3/4-wire
Signals	Signals freely scalable*	Signals freely selectable and scalable*
Features	Alarm indicators, display and keypad (optional) PPS probe with 2 m cable	
Filter	Polyethylene filter	

* Optional, requires HW4 software

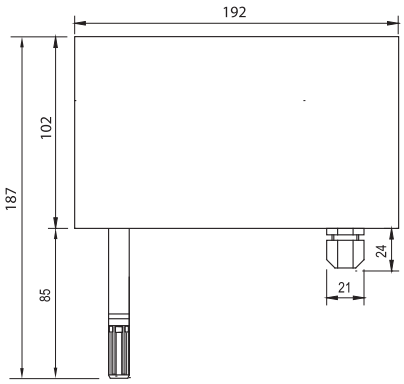

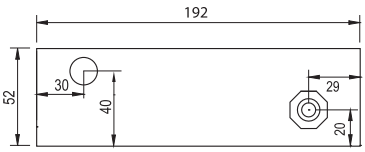

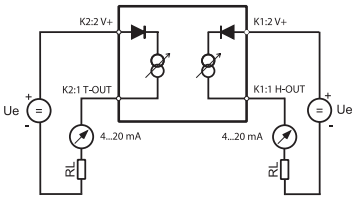

Schematic 2-wire types

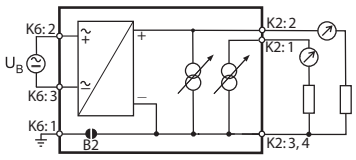

Schematic 3-wire current signal
Low voltage

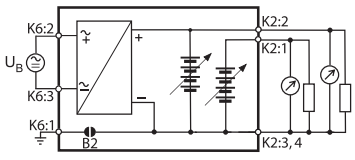

Schematic 3-wire voltage signal
Low voltage

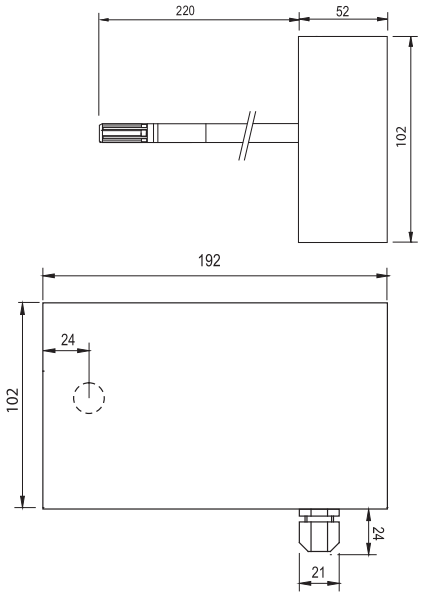

HF6 DUCT MOUNT

Applications

HVAC applications, building management systems etc.

Highlights and common features

- Measures relative humidity, temperature and dew/frost point
- Range of application -40...60 °C, 0...100 %rh
- Automatic sensor test & drift compensation *
- Saves up to 2,000 measurement pairs *
- Use as a simulator for system validation *
- UART service interface
- Integrated probe
- Adjustment profile «Standard», factory adjustment certificate
- Adjusted at 23 °C and 10, 35, 80 %rh
- Accuracy: ±1 %rh / ±0.2 K
- Mains or low voltage power supply

Duct version	HF624-D series	HF63xD series
Type	2- or 2 x 2-wire, galvanically isolated	3/4-wire
Signals	Signals freely scalable*	Signals freely selectable and scalable*
Features	Alarm indicators, display and keypad (optional)	
Filter	Polyethylene filter	

* Optional, requires HW4 software

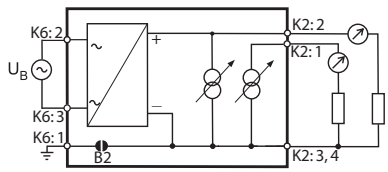

Schematic 3-wire current signal
Mains voltage power supply

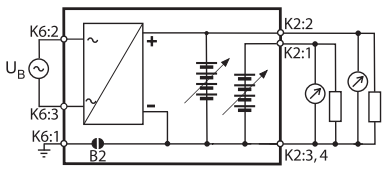

Schematic 3-wire voltage signal
Mains voltage power supply

Order information (for accessories see pages 99-102)										
Transmitters with analog output signals										
Power supply and output signal type										
HF624-										2 x 2-wire, <10...28 VDC, galvanically isolated
HF631-										3/4-wire, 15...40 VDC / 12...28 VAC, 0...20 mA
HF632-										3/4-wire, 15...40 VDC / 12...28 VAC, 4...20 mA
HF633-										3/4-wire, 5...40 VDC / 5...28 VAC, 0...1 V
HF634-										3/4-wire, 10...40 VDC / 8...28 VAC, 0...5 V
HF635-										3/4-wire, 15...40 VDC / 12...28 VAC, 0...10 V
HF636-										3/4-wire, 85...265 VAC, 0...20 mA
HF637-										3/4-wire, 85...265 VAC, 4...20 mA
HF638-										3/4-wire, 85...265 VAC, 0...1 V
HF639-										3/4-wire, 85...265 VAC, 0...5 V
HF63A-										3/4-wire, 85...265 VAC, 0...10 V
Instrument type										
	2									PPS cable probe 2 m, Ø 15 x 100 mm
	D									Duct version, Ø 15 x 220 mm
	W									Wall version, Ø 15 x 85 mm
Output parameters										
		P						X	X	Humidity and passive Pt100
		B						X	X	Humidity & temperature
		H	X	X				X	X	Only humidity
		T						X	X	Only temperature
		1	X	X						Humidity & dew point
		A								Temperature & dew point
Scaling of the output signals (humidity: always 0...100 %rh)										
			X	X						No temperature output signal
			1	X						0...50 °C
			2	X						10...40 °C
			3	X						-40...60 °C
			4	X						-30...70 °C
			5	X						-40...85 °C
			6	X						0...100 °F
			7	X						0...200 °F
			9	X						-50...200 °F
		P	P	3						With passive Pt100 1/3 Class B
		P	P	5						With passive Pt100 1/5 Class B
		P	P	A						With passive Pt100 1/10 Class B
Optional display										
					D					Display (only display without backlight possible for HF624)
					X					No display
Probe extension										
						S				Standard length (D = 220 mm, W = 85 mm)
						1				Standard length (S) + 150 mm
						2				Standard length (S) + 300 mm
						3				Standard length (S) + 450 mm
						4				Standard length (S) + 600 mm
Electrical connections (analog signals to terminals) *										
							1			M16 x 1.5 cable gland (horizontal, type D with display and type W)
							3			x ½" conduit adapter (horizontal, type D with display and type W)
Standard scaling dew point / frost point										
								B	X	-50...50
								C	X	-50...100
								D	X	-50...200

*Types with mains voltage have 2 M16 cable glands or conduit adapters

Detailed specifications		
Power supply / Connections	HF62	HF63
Supply voltage		
	10...28 VDC, 4...20 mA current loop V min = 10 V + (0.02 x load*) * = resistance in Ω	15...40 VDC / 12...28 VAC at 500 Ω 85...265 VAC
Current consumption	2 x 20 mA , 4...20 mA current loop	‹50 mA
Electrical connections	Screw terminals and M16 cable gland or ½" conduit adapter	
Humidity measurement	HF62	HF63
Sensor	ROTRONIC Hygromer® IN-1	
Measurement range	0...100 %rh	
Accuracy at 23 °C	±1 %rh	
Repeatability	0.3 %rh	
Long term stability	‹1 %rh/year	
Response time	Typically 10 s for 63 % of a change 35 → 80 %rh (1 m/sec air flow at sensor)	
Temperature measurement	HF62	HF63
Sensor	Pt100 1/3 Class B	
Measurement range	-100...150 °C / -148...302 °F	
Accuracy at 23 °C	±0.2 K	
Repeatability	0.05 K	
Long term stability	‹1 °C/year	
Response time	Typically 4 s for 63 % of a change from 23 to 80 °C (1 m/sec air flow at sensor)	
Calculated parameters	HF62	HF63
Psychrometric calculations	Dew point or frost point	
Start-up time and refresh rate	HF62	HF63
Start-up time	Typically 3.4 s	Typically 1.9 s
Signal type	4...20 mA	0...20 mA, 4...20 mA / 0...1 V, 0...5 V, 0...10 V
Scale limits	-999.99 ... +9999.99 units, user programmable	
* Maximum load (in Ω)	0/500 Ω	0/500 Ω (current signal), min. 1000 Ω (voltage signal)
Service interface	UART (universal asynchronous receiver transmitter)	
Service cable maximum length	5 m (16.4 ft)	
General specifications	HF62	HF63
Optional display	LCD, 1 or 2 decimals, without backlight	LCD, 1 or 2 decimals, with backlight and trend indicator
Probe material	Polycarbonate	
Filter material	Polyethylene depending on filter, order separately, see pages 99/100	
Housing material / Protection	ABS / IP 65	
Weight	Approx. 300 g	
CE/EMC compatibility	EMC Directive 2004/108/EC: EN 61000-6-1: 2001, EN 61000-6-2: 2005 EN 61000-6-3: 2005, EN 61000-6-4: 2001 + A11	
Solder	Lead free (RoHS compliant)	
Fire resistance	Conforms to UL94-HB	
FDA/GAMP compatibility	Conforms to 21 CFR Part 11 and GAMP4	
Electronics operating range	-40...60 °C / -10...60 °C (models with display); 0...100 %rh, non-condensing	
Temperature limits at probe	-100...150 °C (applies to cable and duct models)	
Maximum air velocity at probe	40 m/s (7,870 ft /min)	

TRANSMITTERS

HygroFlex7 series

The HygroFlex7 series is equipped with sturdy metal housings and stainless steel probes for harsh industrial conditions. In common with other HygroFlex transmitters, the HF7 provides superb accuracy and reproducibity and comes in wall, cable and duct mount versions. Many useful features can be activated with the optional HW4 software, including in-transmitter logging, output scaling and self-diagnostics.

The HF7 series not only has a unique calibration and adjustment process, but also allows every transmitter to be used as a simulator with fixed values. This is a major advantage in system configuration and validation.

Applications

Industrial applications, building management systems, underground railways, tunnelling, etc.

Highlights

- Unique calibration and adjustment process
- Highest reproducibility
- All metal construction of wall, cable and duct versions
- Highly configurable via HW4 software

HF7 WALL/CABLE VERSION

Applications

Industrial processes in harsh environments

Highlights and common features

- Measures relative humidity, temperature and dew/frost point
- Application range -100...150 °C / 0...100 %rh (depending on model)
- Automatic sensor test & drift compensation *
- Integral 2,000 measurement pair logging *
- Use as a simulator for system validation *
- UART service interface
- Fixed probe/cable probe
- Adjustment profile «Standard», factory certificate
- All metal construction
- Accuracy: ±1 %rh / ±0.2 K
- Low voltage power supply

Wall version	HF720-W series	HF73x-W series
Type	2- or 2 x 2-wire, 4...20 mA	3/4-wire
Signals	Signals freely scalable*	Signals freely selectable and scalable*
Features	Without display	Without display
Filter carrier	Slotted sleeve (order filter separately)	

Cable version	HF720-C series	HF73x-C series
Type	2- or 2 x 2-wire, 4...20 mA	3/4-wire
Signals	Signals freely scalable*	Signals freely selectable and scalable*
Features	Without display	
Filter carrier	Slotted sleeve (order filter separately)	

* Optional, requires HW4 software

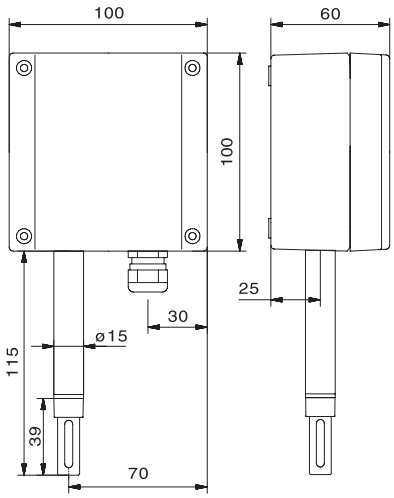

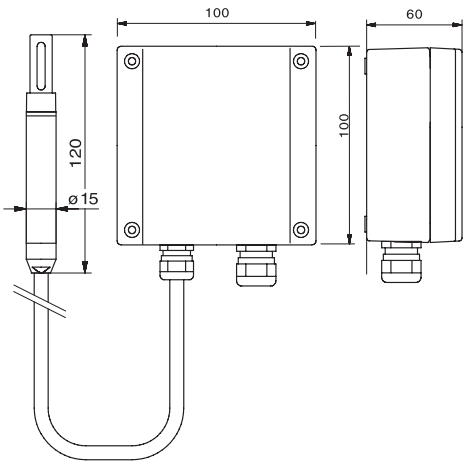

HF7 DUCT VERSION

Applications

Industrial processes in harsh environments

Highlights and common features

- Measures relative humidity, temperature and dew/frost point
- Application range -100...100 °C, 0...100 %rh
- Automatic sensor test & drift compensation *
- Integral 2,000 measurement pair logging *
- Use as a simulator for system validation *
- UART service interface
- Integrated probe Ø 15 x 200 mm
- Adjustment profile «Standard», factory adjustment certificate
- All metal construction
- Accuracy: ±1 %rh / ±0.2 K
- Low voltage power supply

Duct version	HF720-D series	HF73x-W series
Type	2- or 2 x 2-wire, 4...20 mA	3/4-wire
Signals	Signals freely scalable*	Signals freely selectable and scalable*
Filter carrier	Slotted sleeve (order filter separately)	

* Requires HW4 software

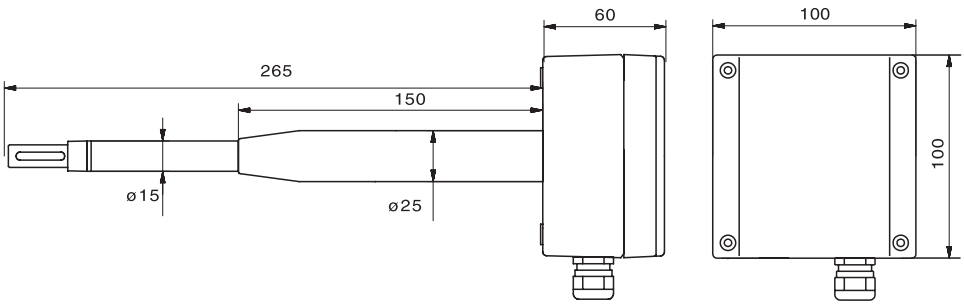

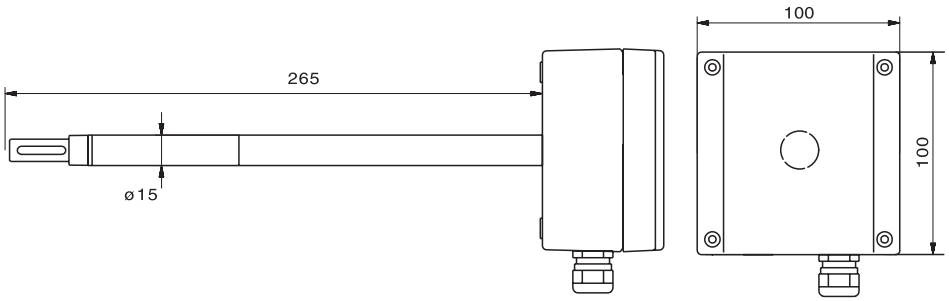

Order information (for accessories see pages 99-102)										
Transmitters with analogue output signals										
Power supply and output signal type										
HF720-										2 x 2-wire, <10...28 VDC, 4...20 mA
HF731-										3/4-wire, 15...40 VDC / 12...28 VAC, 0...20 mA
HF732-										3/4-wire, 15...40 VDC / 12...28 VAC, 4...20 mA
HF733-										3/4-wire, 5...40 VDC / 5...28 VAC, 0...1 V
HF734-										3/4-wire, 10...40 VDC / 8...28 VAC, 0...5 V
HF735-										3/4-wire, 15...40 VDC / 12...28 VAC, 0...10 V
Instrument type										
	N									Steel cable probe Ø 15 x 120 mm, 2 m
	D									Steel duct probe Ø 15 x 265 mm (standard)
	A									Steel duct probe, Ø 25/15 x 265 mm (standard)
	W									Steel wall probe Ø 15 x 115 mm (standard)
Output parameters										
		B								Humidity & temperature
		H								Only humidity
		T								Only temperature
		1								Humidity & dew point
		A								Temperature & dew point
Scaling of the output signals (humidity: always 0...100 %rh)										
			X	**X**						No temperature output signal
			1	**X**						0...50 °C
			2	**X**						10...40 °C
			3	**X**						-40...60 °C
			4	**X**						-30...70 °C
			5	**X**						-40...85 °C
			6	**X**						0...100 °F
			7	**X**						0...200 °F
			9	**X**						-50...200 °F
Optional display										
					X					No display
Probe extension (duct and cable probes)										
						S				Standard length (N = 120 mm, D/A 265 mm, W = 115 mm)
						1				Standard length (S) + 150 mm
						2				Standard length (S) + 300 mm
						3				Standard length (S) + 450 mm
						4				Standard length (S) + 600 mm
Electrical connections (analogue signals to terminals)										
							1			M16 x 1.5 cable gland
							3			½" conduit adapter
Standard scaling dew point / frost point										
								B	**X**	-50...50
								C	**X**	-50...100
								D	**X**	-50...200

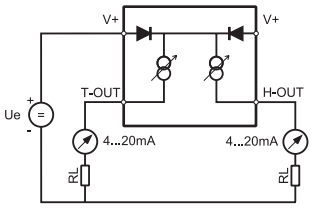

Schematic 2-wire types

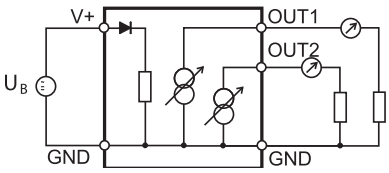

Schematic 3-wire current signal

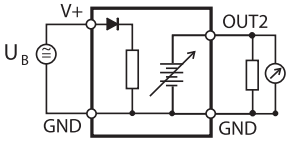

Schematic 3-wire voltage signal

Detailed specifications		
Power supply / Connections	HF72	HF73
Supply voltage		
	10...28 VDC , 4...20 mA current loop V min = 10 V + (0.02 x load*)	15...40 VDC / 12...28 VAC at 500 Ω 85...265 VAC
Current consumption	2 x 20 mA, 4...20 mA current loop	‹50 mA
Electrical connections	Screw terminals and M16 cable gland or ½" conduit adapter	
Humidity measurement	HF72	HF73
Sensor	ROTRONIC Hygromer® IN-1	
Measurement range	0...100 %rh	
Accuracy at 23 °C	±1 %rh	
Repeatability	0.3 %rh	
Long term stability	‹1 %rh/year	
Response time	Typically 10 s for 63% of a change from 35 → 80 %rh (1 m/sec air flow at sensor)	
Temperature measurement	HF72	HF73
Sensor	Pt100 1/3 Class B	
Measurement range	-100...150 °C / -148...302 °F	
Accuracy at 23 °C	±0.2 K	
Repeatability	0.05 K	
Long term stability	‹1 °C/year	
Response time	Typically 4 s for 63% of a jump from 23 to 80 °C (1 m/sec air flow at sensor)	
Calculated parameters	HF72	HF73
Psychrometric calculations	Dew point or frost point	
Start-up time and refresh rate	HF72	HF73
Start-up time	Typically 3.4 s	Typically 1.9 s
Signal type	4...20 mA	0...20 mA, 4...20 mA / 0...1 V, 0...5 V, 0...10 V
Scale limits	-999.99...+9999.99 user scaleable units	
*Maximum load (in Ω)	0/500 Ω	0/500 Ω (current signal), min. 1000 Ω (voltage signal)
Service interface	UART (universal asynchronous receiver transmitter)	
Service cable maximum length	5 m (16.4 ft)	
General specifications	HF72	HF73
Probe material	Stainless steel V2A / 1.4305 / AISI 302	
Filter material	Depending on filter, order separately, see pages 99/100	
Housing material / Protection	IP 65 aluminium diecast	
Weight	Approx. 800 g + 140 g per probe extension unit	
CE/EMC compatibility	EMC Directive 2004/108/EC: EN 61000-6-1: 2001, EN 61000-6-2: 2005 EN 61000-6-3: 2005, EN 61000-6-4: 2001 + A11	
Solder	Lead-free (RoHS-compliant)	
Fire resistance	Incombustible	
FDA/GAMP compatibility	Conforms to FDA 21 CFR Part 11 and GAMP4	
Electronics operating range	-50...100 °C / 0...100 %rh, non-condensing	
Temperature limits at probe	-100...150 °C (applies to cable and duct models)	
Maximum air velocity at probe	40 m/s (7,870 ft/min)	

TRANSMITTERS

HygroFlex & HygroClip-EX

HygroFlex series may be used together with the intrinsically safe HygroClip-EX probes. The relative humidity and temperature can be displayed and output as analog signals. Calculated psychrometric values such as dew point or mixing ratio can also be derived with the HTS3 models and output as a linearized analog signal.

Applications

Humidity and temperature measurement in industrial processes in ATEX rated (EX) zones

Highlights

- Interchangeable probe
- Up to 3 analog output signals
- Automatic load compensation

HTS Series

Applications

Humidity measurement in industrial processes in EX zones

Highlights and common features

- Interchangeable probe
- Measures relative humidity & temperature
- Electronics operating range -40...60 °C; -10...60 °C with LCD, 0...100 %rh
- Service interface
- Accuracy: ±1 %rh / ±0.3 K
- Suitable probes: all HygroClip Ix-EX with Tuchel connector plug

Wall version	HTS1	HTS3
Voltage	Low voltage or mains voltage power supply (see order information)	
Outputs	2 signals freely selectable and scalable*	3 signals freely selectable and scalable*
Features	Alarm indicators, display and keypad (optional)	

* Optional, requires HW4 software

For detailed information visit www.rotronic-humidity.com

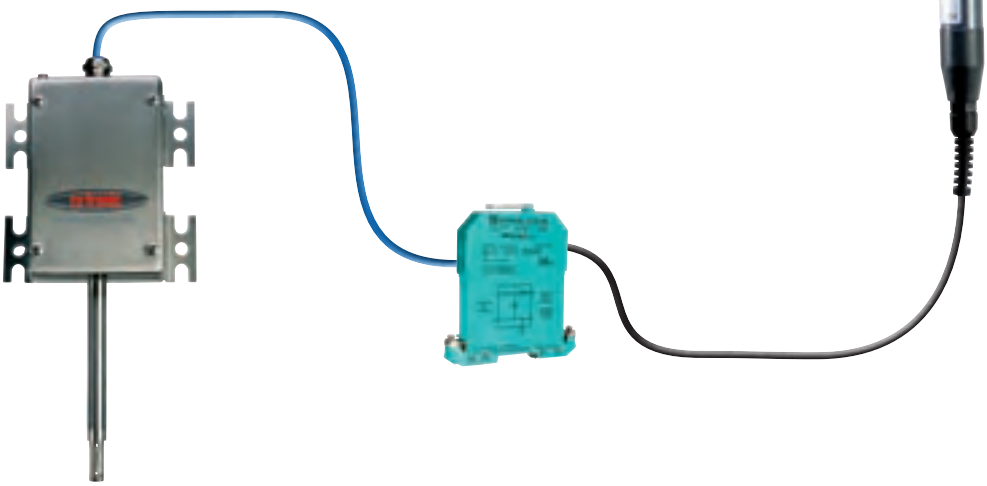

Order information						
HTS						Transmitter with ABS housing
HTM						Transmitter with metal housing
	1					Type 1, 2 x 4...20 mA analog signals
	3					Type 3, 3 x 4...20 mA analog signals & digital interface
		1				12...35 VDC / 12...24 VAC power supply
		2				90...230 VAC power supply
			D			With display
			X			Without display
				E		With Ethernet interface (only HTS3x)
					/9	Customised version

HygroClip IC-EX

HygroClip IE-1-EX

HygroClip ID-EX

HygroClip IW-EX

HygroClip-EX probes

Applications

Humidity measurement in industrial processes in ATEX rated (EX) zones, compatible with HygroFlex HTS transmitters

Highlights and common features

- Intrinsically safe probe ATEX 100
- Power supply via HygroFlex transmitter (15 VDC), or from 2 wire 4...20mA loop (RH or °C only)
- Measures relative humidity and temperature
- Electronics operating range -40...40 °C. Temperature measurement range -50...200 °C (at probe)
- Accuracy: ± 1% rh / ±0.3 K

Order code	HygroClip IC1-EX	HygroClip IC3-EX
Type	Cable probe	
Probe length	120 mm	270 mm
Cable length	2 m	
Housing	Chrome nickel steel, V4A/AISI 316/1.4401	

Order code	HygroClip IE1-EX	HygroClip IE3-EX
Type	Screw-in probe	
Thread	½" G	½" NPT
Cable length	2 m	
Housing	Chrome nickel steel, V4A/AISI 316/1.4401	

Order code	HygroClip IW-EX	HygroClip ID-EX
Type	Wall probe	Duct probe
Probe length	150 mm	250 mm
Housing	Chrome nickel steel, V4A/AISI 316/1.4401	

Order information for accessories	
AC1617-ZB/nn	Connection cable HygroFlex ‹› Zener barrier nn = cable length in m. For nn = 02, 05, 10, 15, in 5 m steps, max. 200 m
ZB1	Zener barrier Z722, use with HygroFlex
ZB1-420	Zener barrier Z788, use without HygroFlex, 4...20 mA, 2-wire
ZB2	Zener barrier Z722 in IP 67 housing, with space for 4 Zener barriers

Applications

ATEX 2180

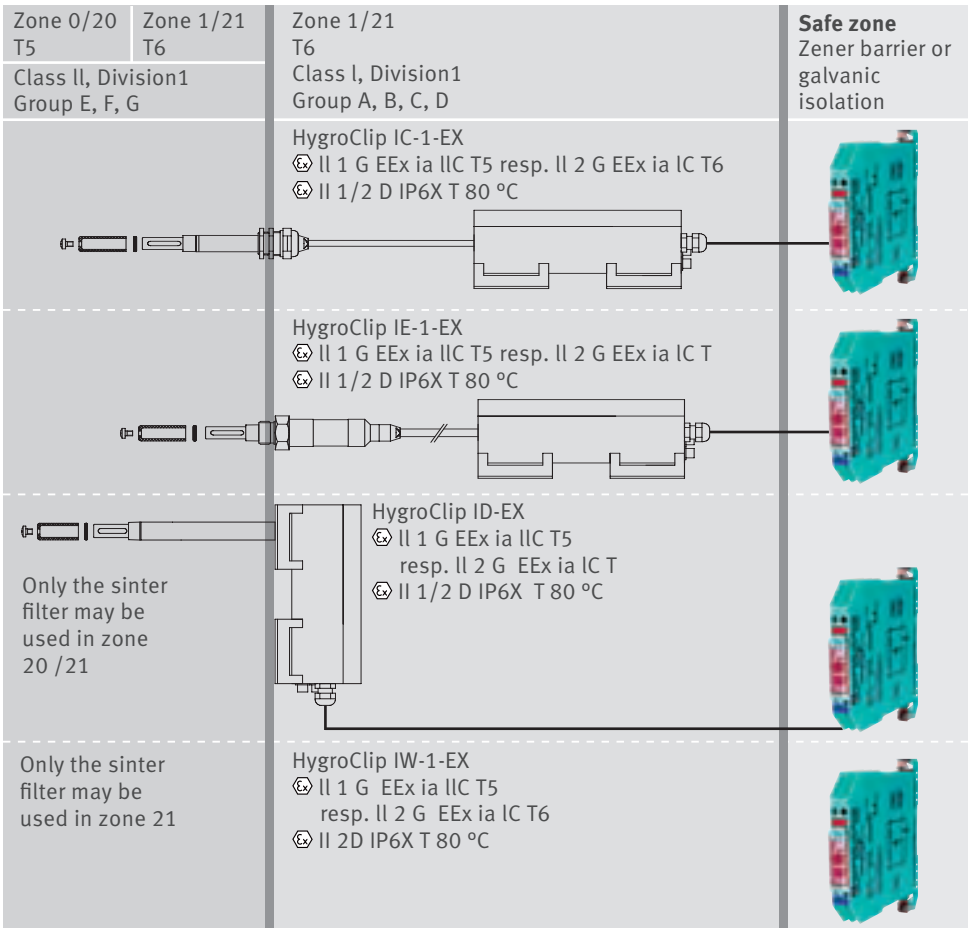

Note: The total cable length between HygroClip-EX probe and HygroFlex transmitter may not exceed 200 m.

HygroClip-EX probes may NOT be calibrated in the EX zone because the accessories are not EX-compliant.

Specifications HygroClip-EX probes				
Feature	Type ID-EX	Type IW-EX	Type IC-x-EX	Type IE-x-EX
Humidity measurement range	0...100 %rh			
Range of application	Electronics: -40...40 °C; 0...100 %rh, temperature at probe: max. -50...200 °C			
Accuracy at 23°C	±1 %rh, ±0.2 K			
Reproducibility	‹0.5 %rh, 0.1 °C			
Response time	‹15 s at 1 m/s air velocity at 23 °C			
Long term stability	‹1 %rh, 0.1 °C per year			
Sensors	Humidity: Hygromer® IN-1; temperature: Pt100 1/3 DIN			
Adjustment points	Digital adjustment, 1...4 points humidity, 2 points temperature			
Output signals & load	Digital, analog 4...20 mA / Max. 800 Ω at 26 VDC			
Power supply	4...20 mA in two-wire circuit, via Zener barrier			
Housing / Protection	Stainless steel V4A/AISI 316/1.4401, 150 x 100 x 58 mm / IP 66			
Probe dimensions in mm (other lengths possible)	Ø 15 x 250	Ø 15 x 150	IC-1-EX: Ø 15 x 120 IC-3-EX: Ø 15 x 270	142 x 25 mm x 1/2" Wrench size 27 mm
Electrical connection	Cable gland / Terminal block			
EC approval & marking	PTB 01 ATEX 2180			
FM approval & marking	3015571 / IS / I, II, III / 1 / ABCDEFG / T6 – 12.0724.0006 IP66			

Specifications HTS series		
Feature	HTS1	HTS3
Probe connections	1	1 (+1 optional), order number /9
Signal inputs	Digital or ROTRONIC analog: 0...2.5 V, 10 Bit A/D, power supply: 15 V DC, max. 10 mA	
Input for third-party probe (1 analog)	No	Yes. Input impedance third-party probe ›1 MΩ
Analog outputs	2 scalable	3 scalable
Output configuration	Out 1 = %rh / Out 2 = °C	Out 1 = %rh / Out 2 = °C / Out 3 = calculation
Output signals (selectable by jumper)	0...1 V, 0...5 V, 0...10 V, 0...20 mA, 4...20 mA	
RS232 interface internally configurable	No	Yes
RS485-networkable (up to 32 devices)	No	Yes
Scalable input/output	-999...9999 user scaleable	-999...9999 user scaleable
Probe adjustment:		
4 points %rh, 1 point (°C)	Yes, with optional display/keypad fitted	
4 points %rh, 2 points (°C), via PC	No	Yes
Psychrometric calculations	None	All available
Pressure compensation calculated values	None	Manually or automatically with pressure probe (option)
Measurement range	Probe-dependent, max. 0...100 %rh, -50...200 °C, 0...2000 hPa	
Electronics operating range	0...100 %rh (non-condensing), -40...60 °C, with display -30...60 °C	
Display/Keypad (option)	LCD display with 3 lines, foil keypad	
Display resolution (option)	0.1 %rh, 0.1 °C, 0.01 for calculated values	
Housing material, dimensions	ABS, 207 x 150 x 58, 3 mm (metal housing: optional)	
Protection	IP 65/NEMA4	
Weight	Approx. 310 g	
Supply voltage	12...35 V DC (140 mA), 12...24 V AC or 90...250 V AC, 3.5 VA	
Cable connection / Connection terminals	M16 cable gland (7 mm cable) / 18 AWG	
Analog outputs (factory setting 4...20 mA)	Current outputs (0/4...20 mA), max. load 500 Ω, other output ranges selectable by jumper; voltage outputs (0...1, 5, 10 V), min. load 1000 Ω Automatic load compensation	
CE conformity	Conforms to EN61000-6-2:2001, EN61000-6-4: 2001	

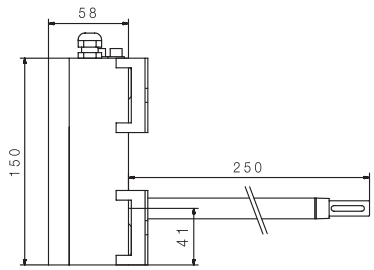

Duct probe

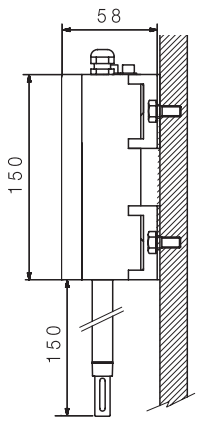

Wall probe

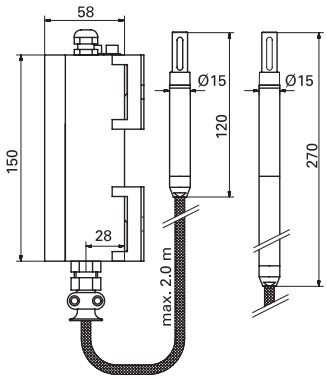

Cable probe

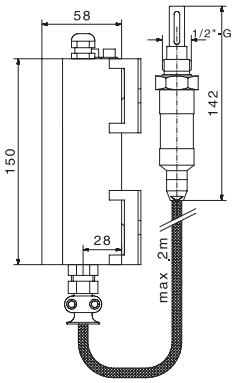

Screw-in probes